Product Overview

The 12 channel constant Voltage LED-Driver is a reliable and efficient solution for your LED lighting needs. It is specifically designed to provide smooth and consistent power to RGB and tunable white LED fixtures, ensuring optimal performance and longevity. With its innovative design, the driver unlocks the potential of true stepless dimming towards darkness while maintaining vibrant colors, high efficiency and minimal flicker.

The LED driver has four connectors, two for power, one for all output channels and one for communication. On the right side, there is an RGB status indicator, reset/test button and a microphone for dynamic control.

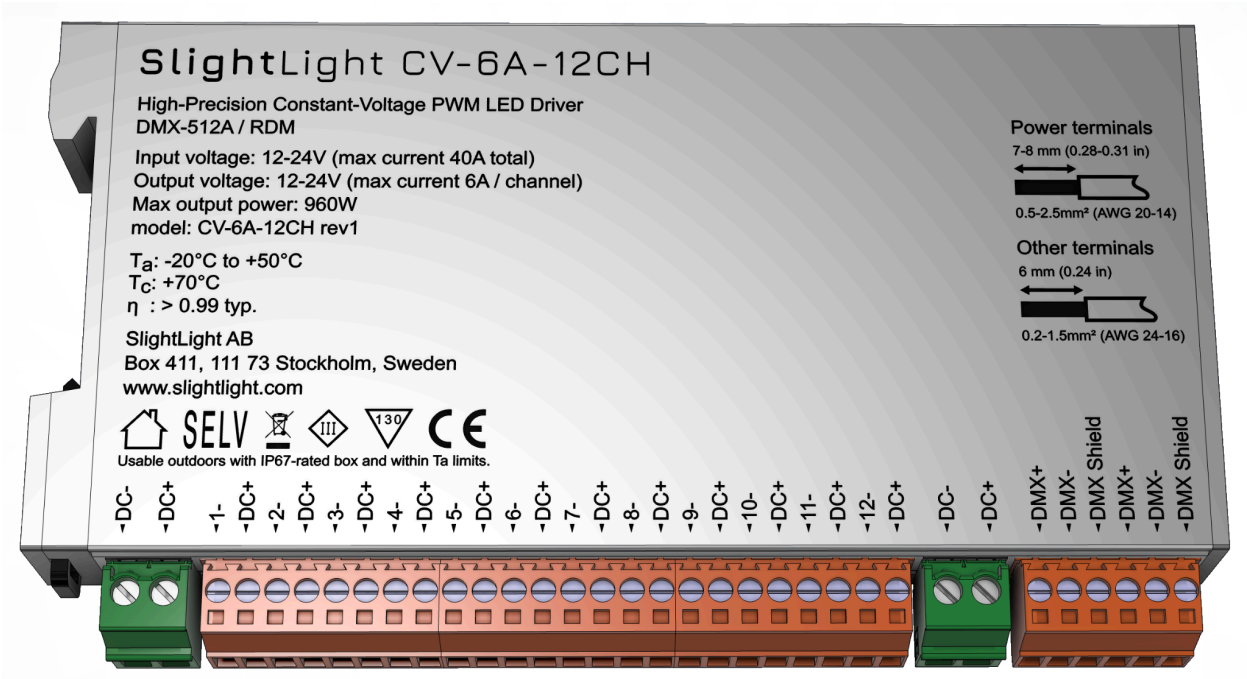

© 2026 SlightLight AB. All rights reserved. Datasheet version V1.4
More product documentation and SlightLight's terms and conditions are available at www.slightlight.com

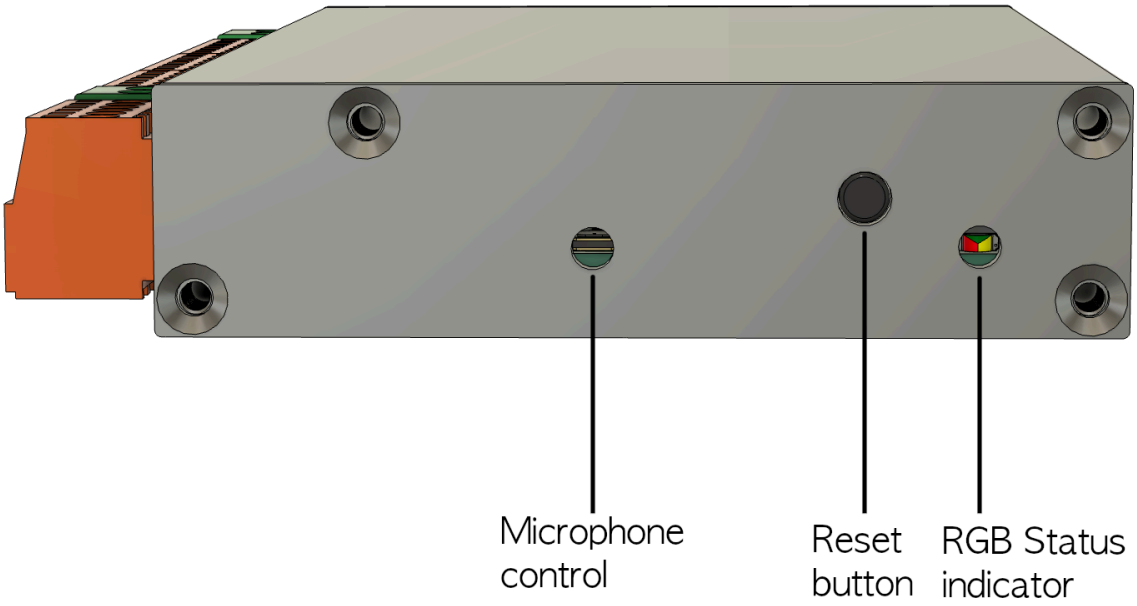

Port Description

Port	Description	Pluggable connector
Communication port	DMX	Weidmüller BL 3.50/180 series 1597400000
Power in 1	12-24 V input. 20 A max	Amphenol / Anytek TJ0251560000G
Output channels	12 output channels 6 A max on any pole	Weidmüller BL 3.50/180 series
Power in 2	12-24 V input. 20 A max	Amphenol / Anytek TJ0251560000G

Power input

The two power connectors are electrically connected to the same DC+ and DC- and are rated for 20 A max. For applications where the total maximum current is above 20 A, both connectors *must* be used to get up to 40 A of total current. For total currents below 20 A,

only one power connector may be used but using both are recommended to improve efficiency. **Important notice**: These connectors are not fused and care must be taken to connect these properly. Swapping the poles may permanently damage the device.

Temperature sensors are installed near the input power connectors. If both power input connectors are not used and the current flowing into the driver exceeds 20A, this may lead to elevated temperatures around the connector, which may trigger the over temperature protection.

Output port

To increase modularity, several smaller connectors can be used for the output channels. As every second pole is electrically connected to DC+, choose connectors with twice as many poles as the number of channels per LED load. For example, if RGB strips are to be connected, four six-pole can be used, or, if RGBW strips are connected, three eight-pole connectors can be used.

DMX Communication:

To use DMX communication, connect the DMX Shield, along with the DMX- and DMX+ terminals, to a DMX512A network. This setup ensures seamless integration with DMX lighting control systems, enabling precise and dynamic control.

Wiring Diagram

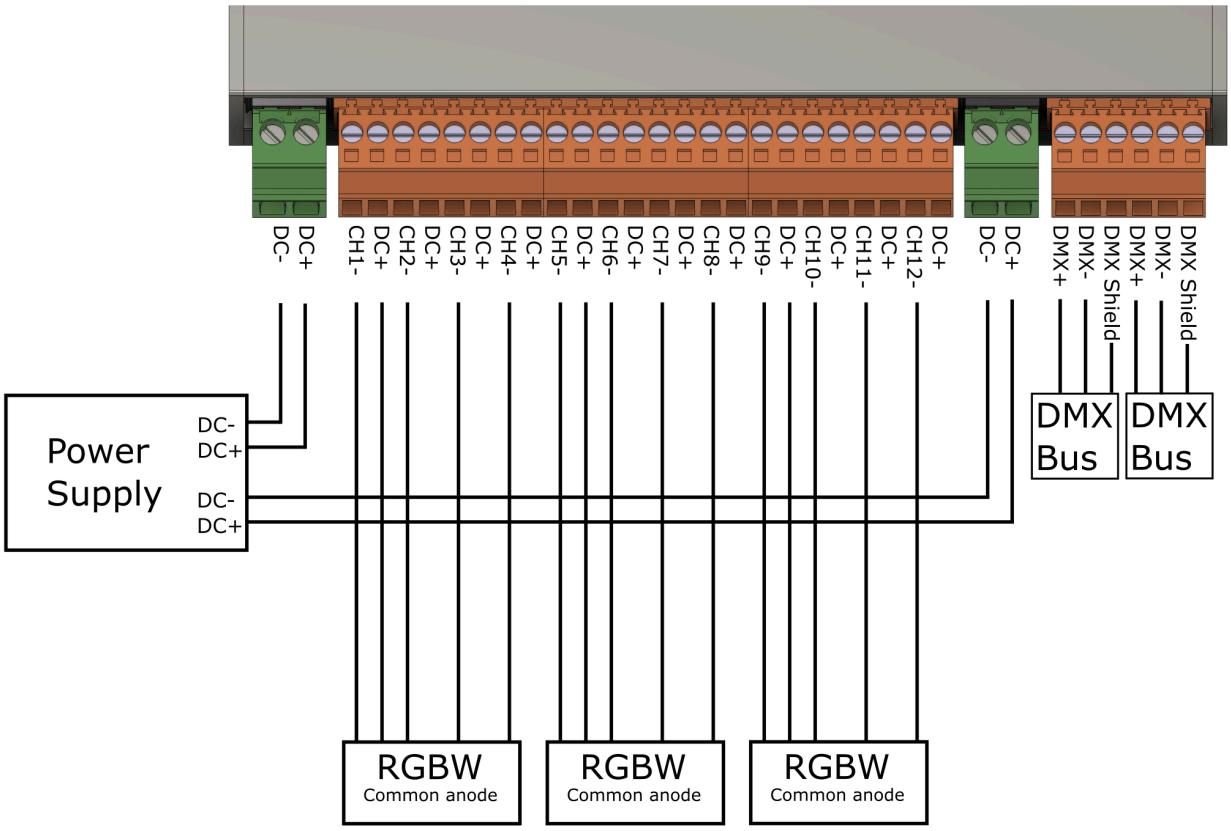

Technical Specification

Ambient temperature: 0 to +50 C

Storage temperature: -10 to +70C

Weight: 240 g

Working voltage: 12 to 24 V

Output voltage: same as input voltage

Input current max (1 power terminal used): 20 A

Input current max (2 power terminals used): 40 A

Output current: maximum 6 A on any output channel. The total output current must not exceed the maximum input current.

Nominal efficiency[1] >99%

Output characteristics

6 A per output channel

12 A maximum common anode current (1 DC+ pole being used)

24 A maximum common anode current (2 DC+ poles being used)

36 A maximum common anode current (3 DC+ poles peing used)

Number of LED outputs: 12

Circuit protection: To prevent risk of damaging any electronics, every output channel is protected with over current protection and over temperature protection. If any over current event or over temperature event happens, all channels will be shutdown immediately.

Dimming characteristics

Dimming range: 100% - 0.0005%

Dimming curve options: Linear, Logarithmic, Gamma

Dimming method: Dynamic PWM

Driver configuration: Through user interface (option) or DMX/RDM

Dimming value resolution:

- DMX: 8 or 16 bits

[1] The measurement setup consisted of 12 LED strips at 2 A each (total current of 24 A) and the efficiency was measured at a 50% dimming level (12 A dimmed average current).

Dimming curves:

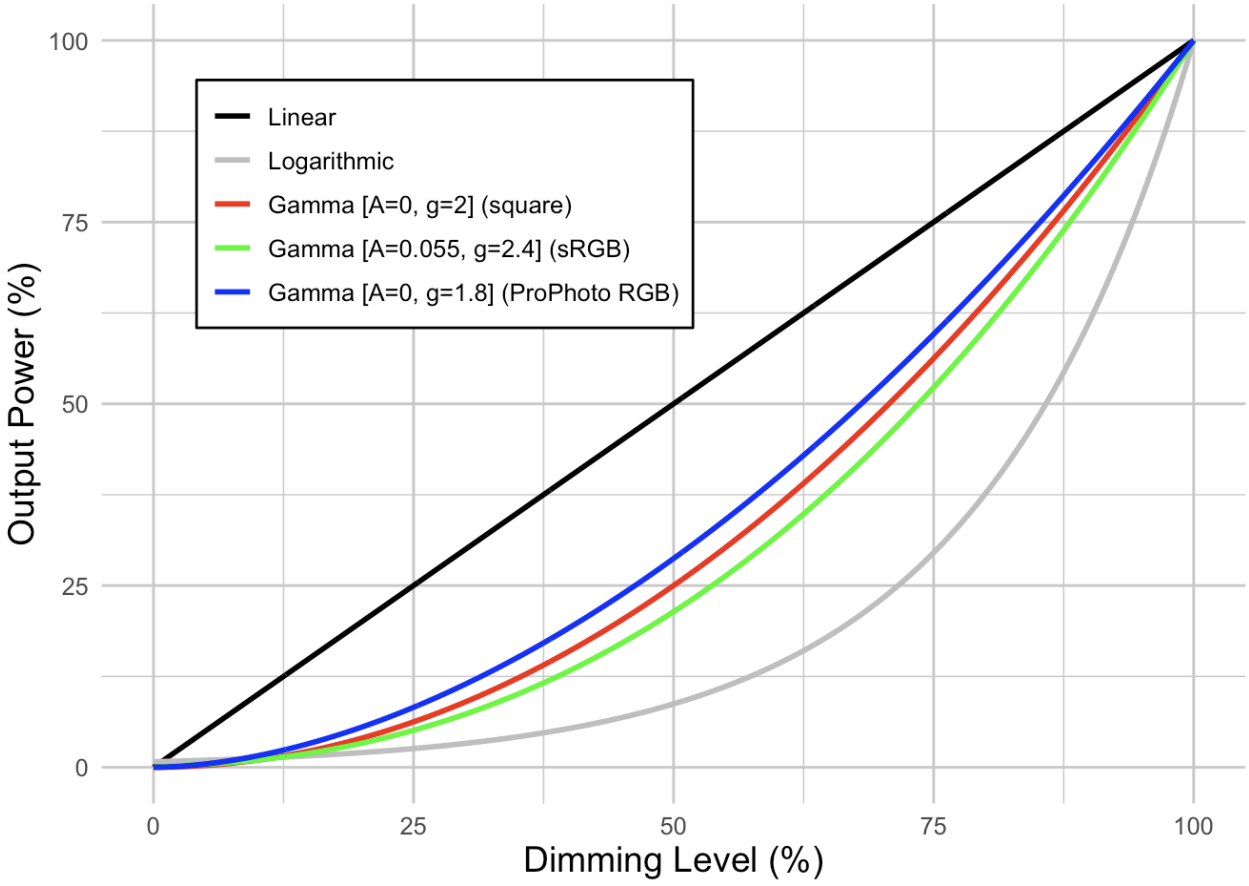

Environmental Conditions

Operating ambient temperature: -20 °C to +50 °C

Operating case temperature (max): +85 °C

LED Driver mechanical details

Weight: 240 g

Length: 136 mm

Width: 80 mm

Height: 18 mm

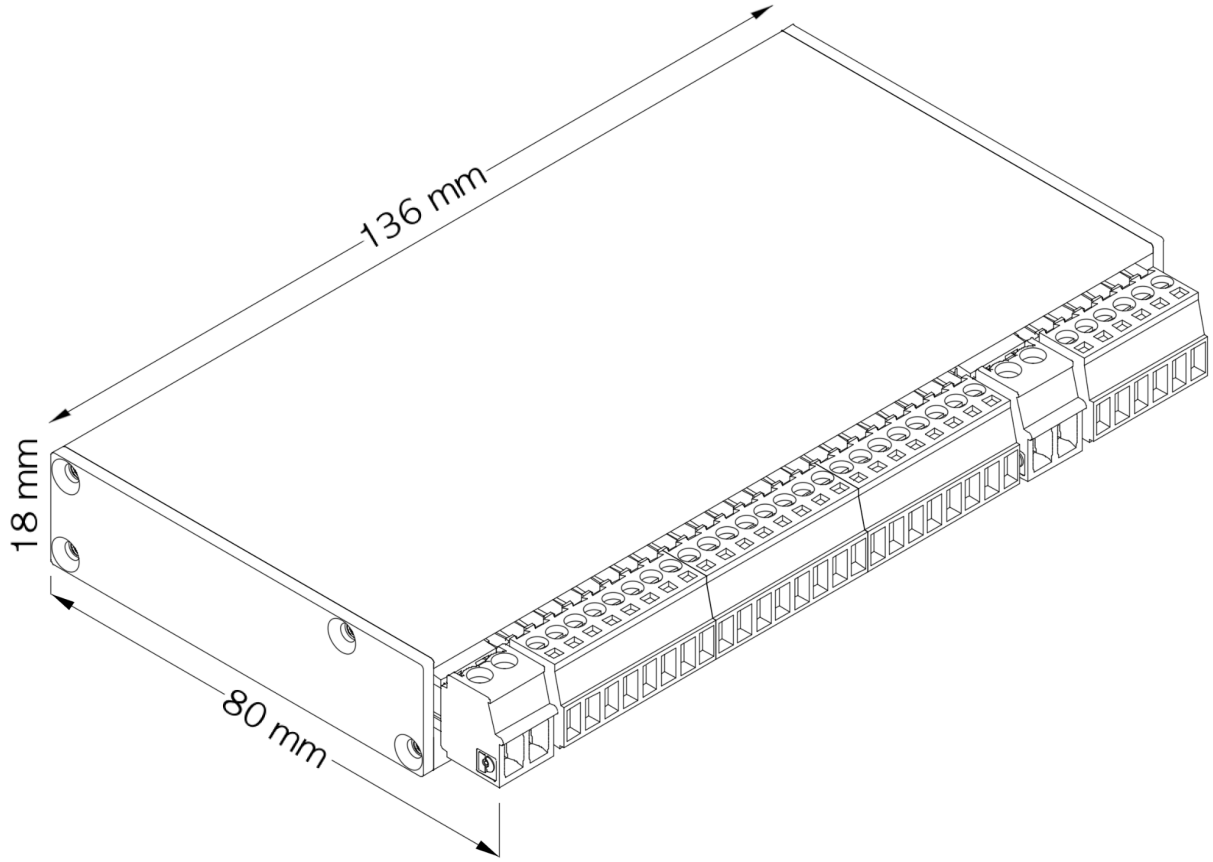

Wiring Specifications

Input terminals

Wire strip length: 7-8 mm

Wire core cross section requirement:

Maximum current carried by the terminal (A)	Nominal cross section area (mm^2) (Rigid or stranded conductor)
2	0.5 (20 AWG)
6	0.75 (18 AWG) to 1.5 (16 AWG)
10	2.5 (14 AWG)

16	4 (12 AWG)
20	4 (12 AWG)

Output terminals and DMX

Wire strip length: 6 mm

Wire core cross section requirement:

Maximum current carried by the terminal (A)	Nominal cross section area (mm^2) (Rigid or stranded conductor)
2	0.2 (24 AWG)
6	0.75 (18 AWG) to 1.5 (16 AWG)

Standards and Compliance

The product is tested according to industry standards and regulations to ensure it meets all safety and quality requirements. It complies with relevant certifications and guidelines.

Safety	EN 61347-2-13:2014 EN 61347-1:2015
Conducted emissions	EN 55015:2019
Radiated emissions	EN 55015:2019
Electromagnetic immunity	EN 61547:2009
DMX	E1.11 – 2008, USITT DMX512-A ANSI E1.20
Restriction of hazardous substances	EN 63000:2018

Installation instructions

Connect input power to the green terminals and the orange connectors to the output loads. After powering it on, it can be fully configured over RDM.

.

Clearance type	Description	Distance
Height clearance to building element (HCB)	Minimum distance between the top of the control gear and any building element above it	50 mm
Minimum insulation clearance (MIC)	Minimum distance between the top of the control gear and the building insulation above it	50 mm
Side clearance to building element (SCB)	Minimum distance between the side of the control gear and any building element	50 mm
Side clearance to insulation (SCI)	Minimum distance between the side of the control gear and any building insulation	50 mm
RISK OF FIRE	BUILDING INSULATION MUST NOT COVER THE CONTROL GEAR	

Operating the driver

The driver is fully configured over the RDM protocol and can be done with any RDM-compatible tool such as DMXCat or equivalent. Connect the tool, set DMX address, label, dimming curves and more.

LED Status indicator and reset button

A push button and an RGB LED is located at the side of the driver. See table below for different status indications.

Status	Visual representation	Comment
Active		Steady green light
Inactive		Low duty green blink
No communication		Green blink
Over current error		Steady blue light
Over temperature error		Steady red light

If an over temperature or over current error has occured, the error condition must be cleared manually by power cycling the driver or pressing the button. If the error condition is gone, this will bring the LED driver back to any of the green operating states.

Safety

	An independent control gear that can be used where normally flammable materials, including building insulation, are or may be present, but cannot be abutted against any material and cannot be covered in normal use.
	The AC/DC power supply must be CE-certified, provide a SELV-compliant output, meet LPS requirements, and include overload and short-circuit protection. It must deliver a stable voltage within the LED driver's input range and ensure electrical isolation for safe and reliable operation. Always disconnect power before installing or making connections.
	The LED driver may only be connected and installed by a qualified electrician. All applicable regulations, legislation, and building codes must be observed. Incorrect installation of the LED driver can cause irreparable damage to the LED driver and the connected LEDs. Pay attention when connecting the LEDs: polarity reversal results in no light output and risks damaging the LEDs.
	LED drivers are designed and intended to operate constant voltage LED loads only. Powering other loads may push the LED driver outside its specified design limits and is, therefore, not covered by any warranty.
	Please observe voltage drop over long cable lengths. Longer cable lengths increase EMI susceptibility.

Label descriptions

Ta	The Ta marking indicates the maximum ambient temperature at which the product is designed to operate safely and reliably.
Tc	The tc marking indicates the maximum case temperature of the product, representing the highest temperature the outer casing can safely reach during operation.
	Class III refers to electrical equipment designed to operate at safety extra-low voltage (SELV), typically under 42.4 VAC or 60 VDC, with no risk of electric shock, as it relies exclusively on low voltage for protection and does not include higher voltage circuits.
	LED drivers are designed and intended to operate constant voltage LED loads only. Powering other loads may push the LED driver outside its specified design limits and is, therefore, not covered by any warranty.
	The upside-down triangle with "130" inside indicates that, in the event of a fault, the temperature will not exceed 130°C.
	The house symbol indicates that the product is designed and certified for use in indoor environments, ensuring it operates safely and effectively when installed in locations protected from direct exposure to water, dust, and outdoor conditions.
	The CE symbol indicates that the product complies with European Union (EU) safety, health, and environmental protection standards and is authorized for sale within the European Economic Area (EEA).
	The crossed-out trash can symbol indicates that the product must not be disposed of as household waste and must instead be recycled at a local recycling facility, in compliance with environmental regulations.

Certifications

CE

Warranty

This product is backed by a 5-year manufacturer warranty. The warranty covers all failures of the product due to defects in materials or workmanship under normal use. It does not cover damage caused by accidents, misuse, unauthorized repairs, or normal wear and tear.